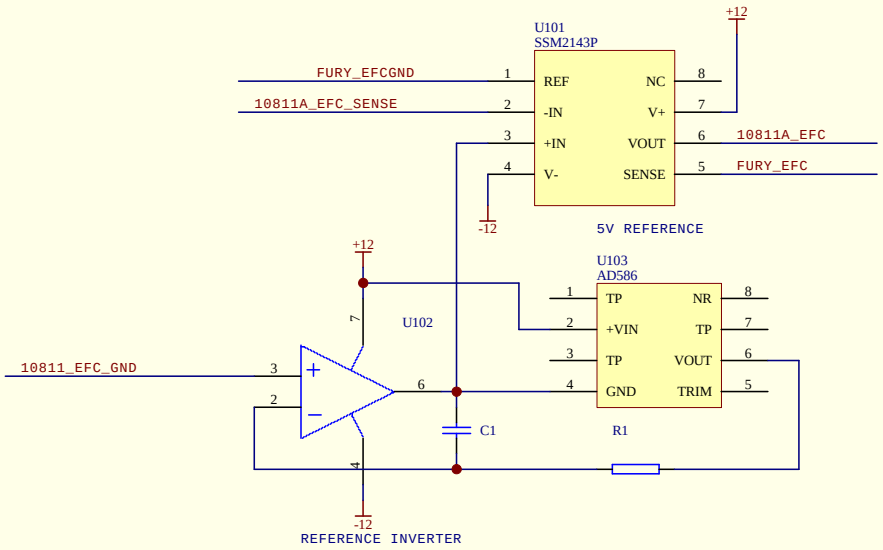

Title		
Size A4	Number	Revision
Date: 2-Nov-2007		Sheet of
File: D:\TIMENUTS\EFC\EFC_DRV.S01		Drawn By: