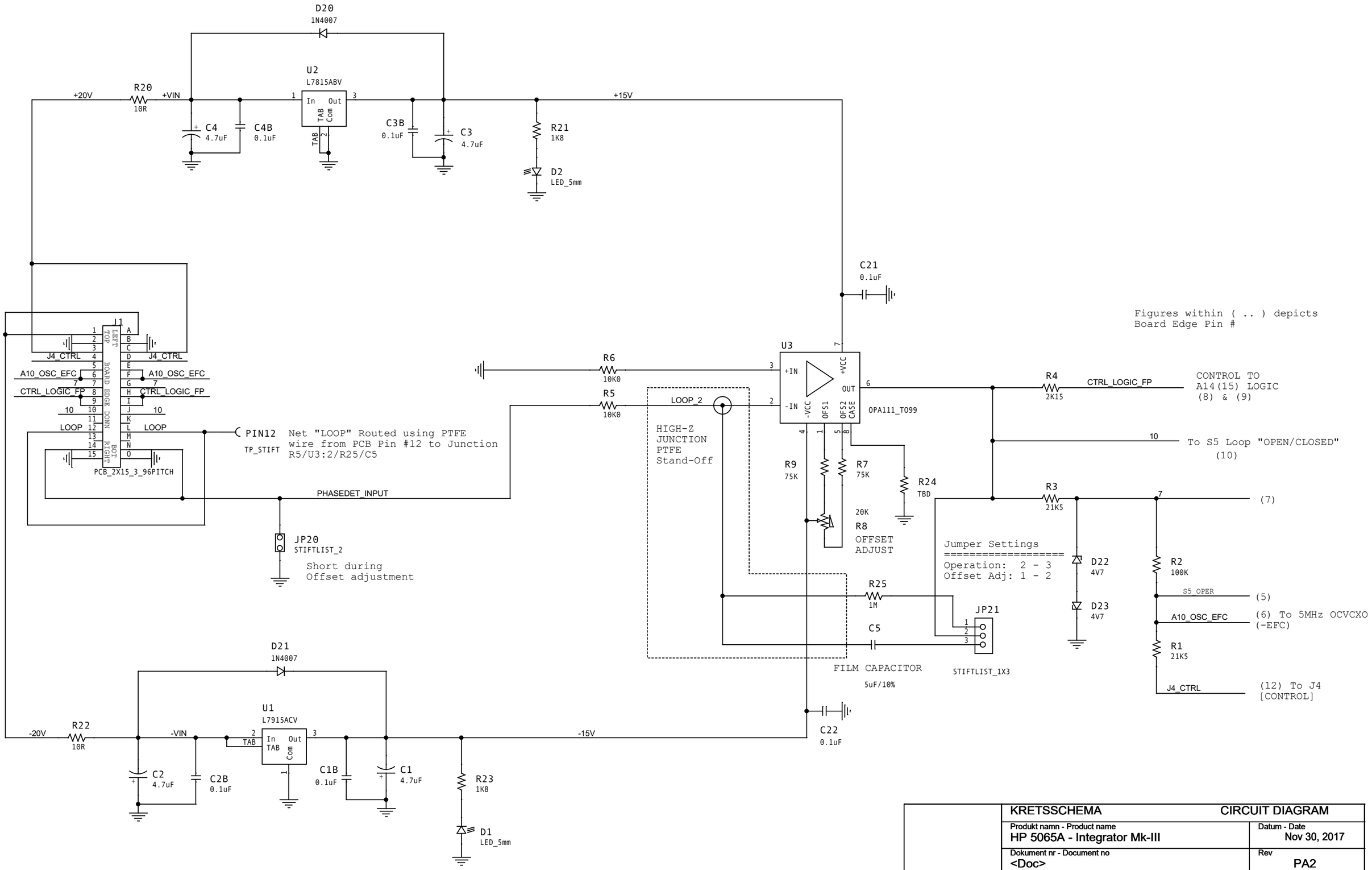

REFDES 0...19 corresponds
to original referece designators.
Added component Refdes suffixes
starts at 20.

R2 is mounted on Front Panel Switch S5
(OPER/LOOP OPEN) in early 5065A's.
and should NOT be populated when upgrading
the Integrator board in those units.

	KRETSSCHEMA	CIRCUIT DIAGRAM	
	Produkt namn - Product name HP 5065A - Integrator Mk-III		Datum - Date Nov 30, 2017
	Dokument nr - Document no <Doc>		Rev PA2
	Uppgjord av - Prepared by Ulf Kylenfall	Godkänd av - Approved by <Approved>	
CAD Cadence 17.20	Page Modify Date Thursday, December 28, 2017	Blad - Page 1	Number of Pages 1