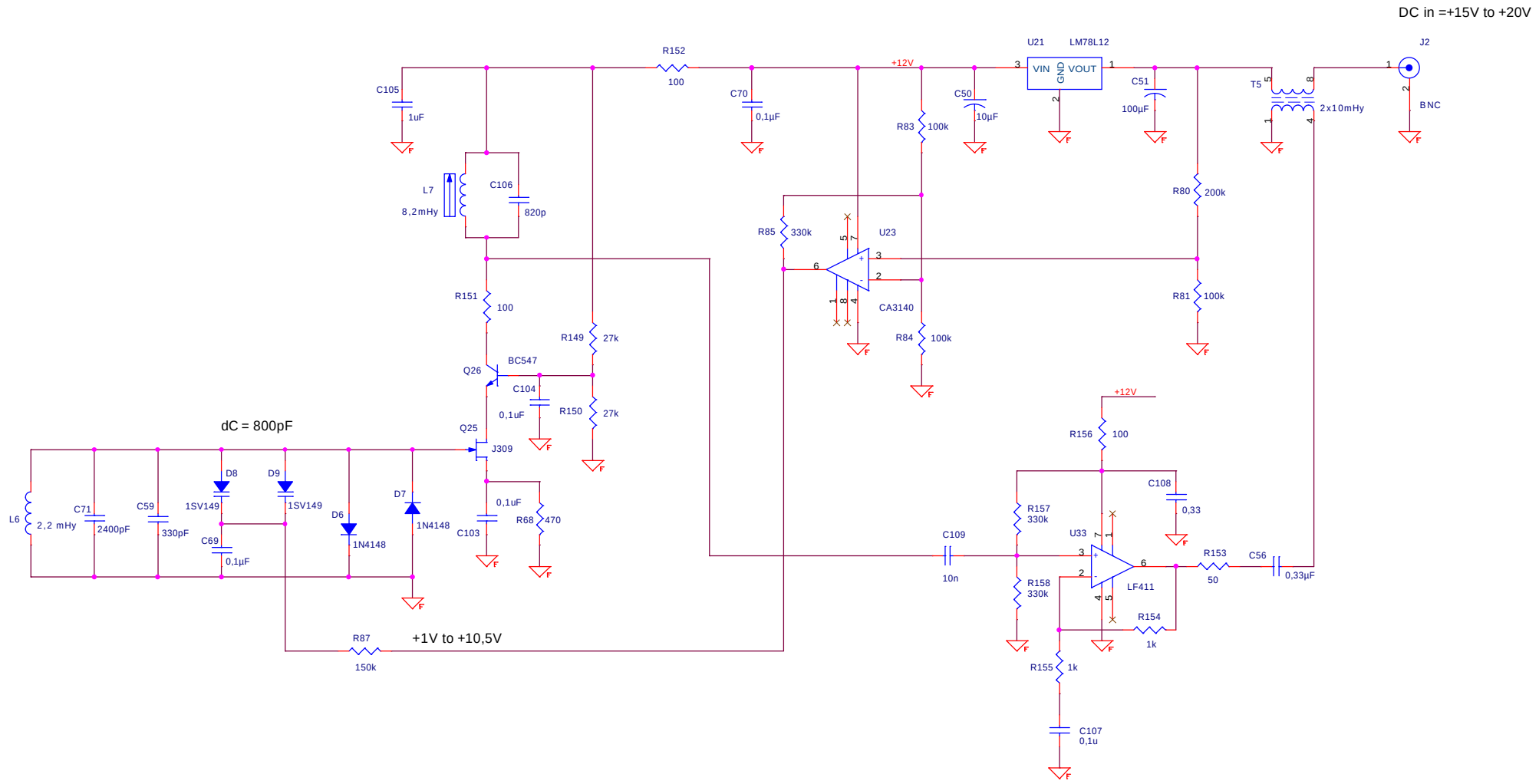

L:\+21 JAN 2013\+PCS CONSULTANTS\+EIGENE SACHE\60KHZ\60KHZ.DSN

Title	<Title>	
Size B	Document Number <Doc>	Rev <RevCod
Date: Wednesday, June 07, 2023	Sheet 1 of 1	